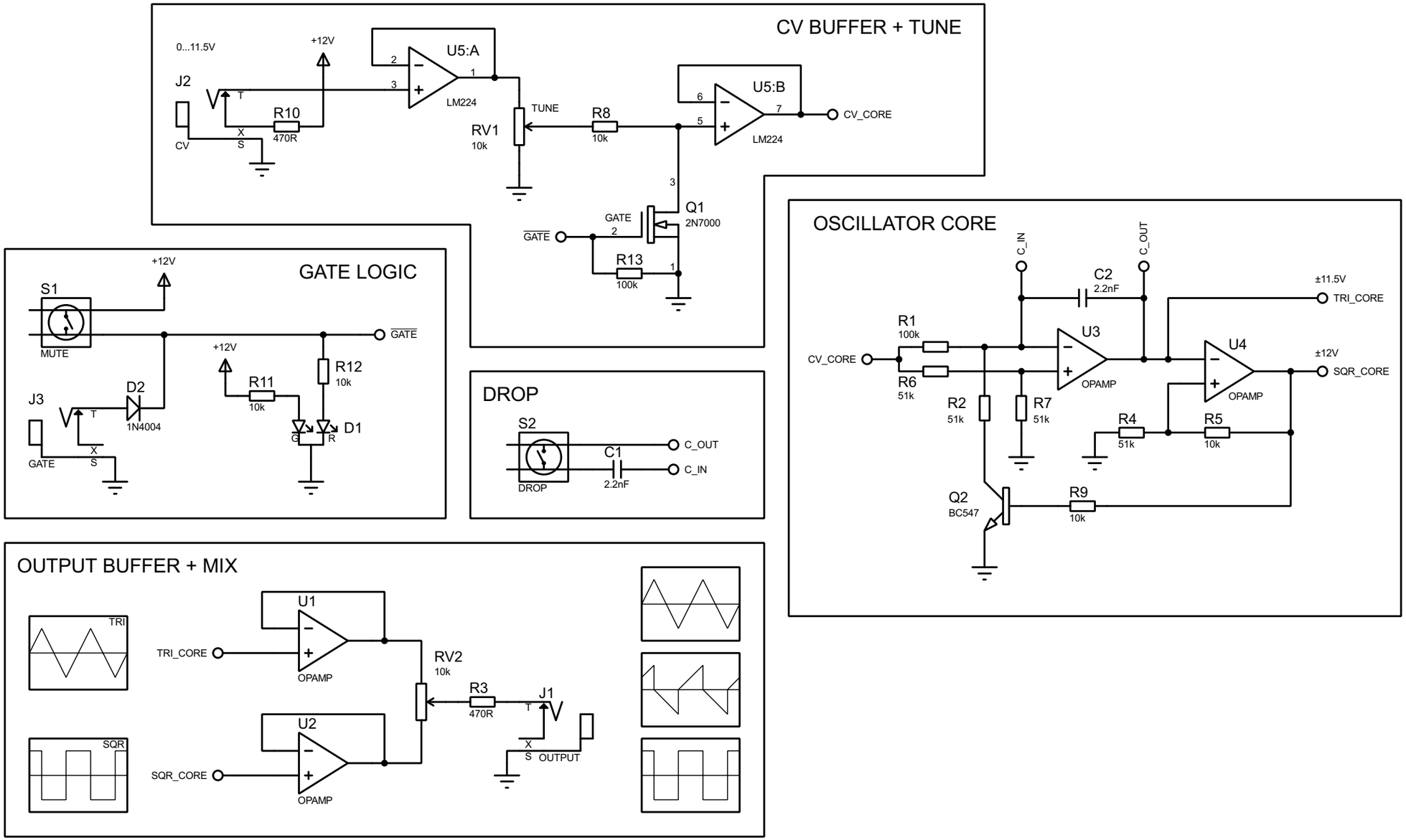Otto's DIY Cookbook: Simple VCO